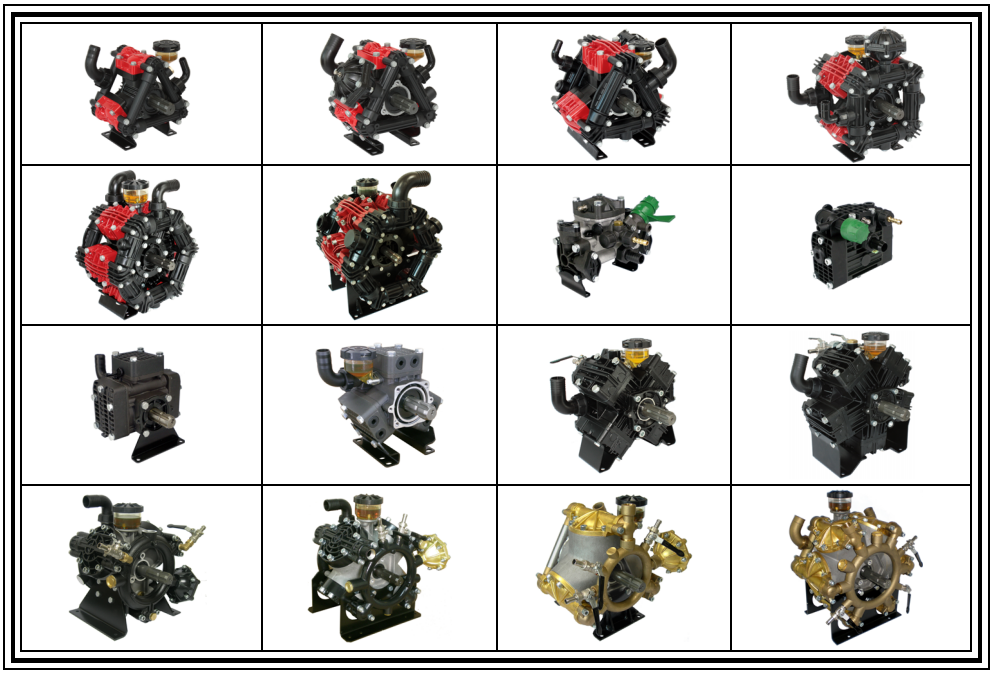

USE AND MAINTENANCE MANUAL FOR DIAPHRAGM PUMPS

assembly instructions

COMPANY WITH QUALITY SYSTEM
CERTIFIED BY DNV GL
= ISO 9001 =

Please carefully read this manual before using the Pump, in particular follow the safety information. Store in a suitable place to keep it unalterate.

	INDEX	PAGE
En	**1. GENERAL INFORMATION** 1.1 SAFETY SYMBOLS 1.2 PUMP IDENTIFICATION 1.3 WARRANTY	5
	2. INTRODUCTION	6
	3. INTENDED USE	
	4. OPERATIONAL RESTRICTIONS	
	5. GENERAL WARNINGS	
	6. BEFORE START UP 6.1 LIQUIDS TO BE PUMPED 6.2 INLET AND OUTLET OF THE PUMP 6.3 INLET CONDITIONS (SUCTION) 6.4 OUTLET CONDITIONS 6.5 SPEED AND ROTATION DIRECTION	6-7
	7. CONTROLS ON SYSTEM 7.1 UNLOADER VALVE 7.2 NOZZLE 7.3 PULSATION DAMPENER (ACCUMULATOR) 7.4 PRESSURE GAUGE	7-8
	8. INSTALLATION, START UP AND SWITCHING OFF 8.1 POSITIONING 8.2 ASSEMBLY 8.3 START UP 8.4 SWITCHING OFF AND STORAGE 8.5 PRECAUTIONS AGAINST FREEZING	78-9
	9. MAINTENANCE 9.1 ROUTINE MAINTENANCE 9.2 LUBRICATION	9-10-11
	10. TROUBLE SHOOTING	11
	11. OIL AND WEIGHT	12
	12. TORQUE SPECIFICATIONS	13-14
	DECLARATION OF INCORPORATION	15

1. GENERAL INFORMATION

1.1 SAFETY SYMBOLS

The "**WARNING**" symbol here at the side draws the operator's attention to situations and/or problems related to the correct **operation of the Pump**.

The **"DANGER"** symbol here at the side draws the operator's attention to situations and/or problems that could compromise **the safety of people**.

1.2 PUMP IDENTIFICATION

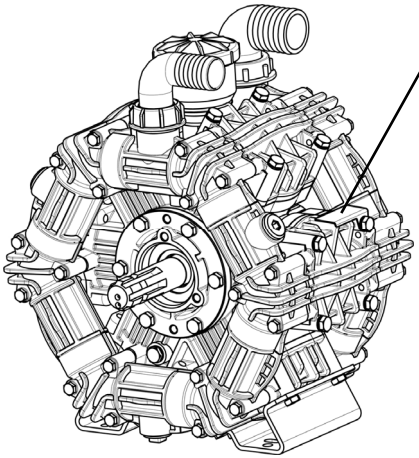

The Label on the Pump bears the Model, the Code, the Serial Number and the main technical specifications with the maximum operational values of the product. The specimen at the side is an example of a Label and its position on the Pump.

1.3 WARRANTY

UDOR guarantees its products for 12 (twelve) months from the date of shipment.
Warranty covers the replacement of parts or products which, to the sole and undisputable judgement of UDOR, are considered to be defective from the date of shipment. Expenses for labour and transport are to the charge of the buyer. The product shall only be returned to UDOR following authorisation from the latter, free of charge to the warehouse of UDOR and complete with every single original component, without any sign of tampering. Replaced products or components pass over to the ownership of UDOR.
Warranty of a product is void if the buyer fails to observe the payment terms of the product.
Warranty does not cover the following damages:

- Direct and indirect damages of any kind.
- Damages deriving from the failed observance of safety instructions and standards.
- Damages to products due to: incorrect use, dropping, incorrect installation, exposure to freezing conditions, failed maintenance, carelessness and negligence during use.
- Damages to parts subject to normal wear and tear.
- Damages to products in the case of the use of non-original parts or parts that are not explicitly approved by UDOR.

UDOR may add, at any time, any modifications considered necessary to improve the product without having to apply such modifications to products that have already been sold or that are ready for shipment.
The warranty herein is the only one valid and replaces all other forms of warranty or guarantee conditions.
Any controversies will be dealt with according to Italian law by the competent court of Reggio Emilia.

2. INTRODUCTION

The Diaphragm Pumps of UDOR, with radial piston kinematic drive, are designed and manufactured to pumps or transfer **water** or **pesticides and herbicides** in water solution to be used according to the instructions of the actual producers.
They are generally driven by: electric motors, endothermic petrol or diesel engines and hydraulic motors, tractor P.T.O.. Couplings may be fulfilled by means of transmission shaft, direct flanging, reduction unit or multiplier, joints, pulleys and belts.

⚠ **The Pump is supplied to be installed on a more complex machine or plant; the manufacturer of such machine or plant shall add all the information related to safety of the assembled machine/plant fulfilled.**

3. INTENDED USE

The Diaphragm Pumps of UDOR are designed for use in machines or systems that transfer water or pesticides or herbicides, under pressure, such as the following for example: Sprayers, Mist Sprayers, Herbicide Spray Booms, Gardening, Civil and Industrial Washing Systems, Drain and Pipe Cleaning, Fire-fighting, Antifreeze Systems.
The temperature of the workplace shall be between: Min. 0°C (32°F) - Max.45°C (113°F)
The Pump cannot be used submerged under any type of liquid.

4. OPERATIONAL RESTRICTION

The specifications of the liquid to be used are described in detail herewith: do not use for different liquids; in particular, it is NOT possible to use UDOR Pumps in the following conditions:
- In the presence of water with high salt content, such as seawater for example.
- In workplaces where there is a corrosive or explosive atmosphere.
- In the presence of any liquid that is not compatible with the constructional material of the Pump.
- To pump paint, solvents, fuel and any flammable liquid (not suitable for ATEX workplaces).
- To foodstuffs.
- To wash people, animals, live electrical or electronic equipment.
- To wash the Pump itself.

5. GENERAL WARNINGS

- Never start the Pump under pressure.
- Constantly check the state of wear of the pipes and relevant fittings, especially those under pressure. Pipes with signs of abrasion or that do not guarantee a perfect seal shall be replaced.

- Protect rotating parts with a cover to prevent contact.
- The Pump is designed to be integrated in a machine or system, with various supply systems, which may make the noise level vary, even quite substantially. The manufacturer of such machine or system shall assess the level of noise emitted by the assembled machine or system and inform the user appropriately, also in relation to the use of suitable personal protection equipment.

6. BEFORE START UP

6.1 LIQUIDS TO BE PUMPED

The Pump is designed and manufactured to tranfer water or pesticides and herbicides in water solution to be used according to the instructions of the actual producers.
The liquid intaken must be free from sand or other solid particles in suspension.
The liquid intaken shall have viscosity and density similar to water.
The temperature of the liquid to be pumped must be between 5°C (41°F) and 38°C (100°F).
Any other use is not admitted unless authorised in writing by the Engineering Department of UDOR.

6.2 INLET AND OUTLET OF THE PUMP

The Inlet of the liquid to be pumped, also called intake or supply, is generally of larger diameter than the Outlet, also called delivery.

⚠ The Inlet and Outlet CANNOT be inverted.

6.3 INLET CONDITIONS (SUCTION)

Make sure the supply line is connected correctly and that it complies with the following requisites:
- Any point of the inlet pipeline cannot be smaller than the diameter of the Pump inlet.
- Be absolutely leak-proof to avoid any air infiltration.
- Not have 90° bends near the Pump inlet.
- Not have contractions or restrictions.
- Avoid any turbolence near the Pump inlet and in the supply tank.
- If an inlet filter is used, it must allow 200% more flow than the flow required by the Pump. It must not cause any contraction or any pressure drop. The filter should be grant a filtration degree between 32 and 50 Mesh and should be cleaned on a regular basis to ensure its proper functionality.
- Maximum inlet pressure admitted: 0.5 bar (7 PSI).
- Maximum negative inlet pressure admitted:-0.2 bar (-3 PSI) [-6 inch.Hg].
- Maximum offset admitted between pump and supply source underneath: 2 m. (6.5 ft.).

6.4 OUTLET CONDITIONS

Make sure the delivery line and all the accessories are connected correctly, secured firmly, hermetically sealed and that the pipes are sized appropriately. All pressurised pipes must be marked durably with the maximum admitted pressure, which must never be less than the maximum working pressure of the Pump, written on the Label.

6.5 SPEED AND ROTATION DIRECTION

⚠ The rotation speed of the shaft of the Pump must never exceed the RPM written on the Label of the actual Pump.

The minimum RPM admitted is: maximum RPM x 0.6.
The rotation direction of the shaft of UDOR Pumps may be clockwise or anticlockwise.

7. CONTROLS ON SYSTEM

7.1 UNLOADER VALVE

A pressure regulator valve must be installed to avoid the pressure exceeding the maximum limit indicated on the Label of the Pump.

⚠ Use of the Pump, even for a short period, with a pressure higher than such limit would damage the Pump itself.

The regulator valve shall be compatible with the maximum pressure, flow rate and temperature values written on the Label and in the “INLET CONDITIONS”.

⚠ Incorrect installation of the pressure regulator valve could cause serious personal injuries and damage to property as well as seriously damaging the actual Pump.
The circuit must be equipped with another safety valve to prevent the maximum pressure from being exceeded in the case of anomalies in the pressure regulator valve.

7.2 NOZZLE

A deteriorated nozzle could cause a drop in pressure; in this case, do not adjust the pressure regulator valve in the attempt to increase the pressure of the system because when the delivery line closes, this would cause a boost in pressure, which could damage the Pump.
If the pressure drops, it is advisable to replace the nozzle and adjust the system’s pressure again. The flow rate of the Pump must be at least 10% higher than the flow rate that the utilities demand; the excess flow rate must be discharged.

7.3 PULSATION DAMPENER (ACCUMULATOR)

Before starting the Pump, verify the air pressure in the accumulator, if present.
This operation may be carried out, with the Pump off, connecting an air source to the inflation valve.
The air pressure should be checked periodically.

⚠ Using the Pump without air in the accumulator may cause system malfunctioning, damage the accumulator diaphragm or the whole Pump.

The accumulator's air pressure varies according to the Pump's operating pressure:

Pump Working Pressure	bar *PSI*	2 *29*	5 *72*	10 *145*	20 *290*	30 *435*	40 *580*	50 *725*
		⇩	⇩	⇩	⇩	⇩	⇩	⇩
Accumulator Pressure	bar *PSI*	1 *15*	2 *29*	4 *58*	5 *72*	6 *87*	7 *102*	8 *116*

UDOR normally inflates the Pumps pulsation dampener at a pressure of 5 bar (72 PSI) approx.

7.4 PRESSURE GAUGE

Install a gauge as near as possible to the outlet of the Pump because the maximum pressure written on the Pump's Label refers to the pressure detected in that point and not on the nozzle or on other accessories.

⚠ **All the components of the machine or of the circuit must have technical specifications compatible with the data written on the Pump's Label.**

8. INSTALLATION, START UP AND SWITCHING OFF

8.1 POSITIONING

Smaller and lighter pumps can be handled by hand in compliance with current standards. Heavier pumps must be handled using a suitable lifting device. If you need to use a lifting device, use appropriate strap/s, being careful not to damage the product. The weight of the pumps is written in the table on page 17.
To safeguard the lifetime of the components subject to wear and tear such as valves and diaphragms, the pump should be installed below or at water level.
UDOR Diaphragm Pumps are, in any case, self-priming; they may be installed above the water source. In this case, the maximum allowed difference in height is 2 mt. (6.5 ft.).
If the Pump is used in a particularly dirty workplaces or is exposed to atmospheric agents, you are recommended to protect it, respecting the ventilation conditions.

8.2 ASSEMBLY

Fit the Pump on a rigid surface keeping the power take-off and support feet horizontal to ensure correct drainage in the case of leakage of water or oil. The Pump must be secured firmly on a base, which must be perfectly aligned with the transmission components. In the case of belt transmission, make sure the pulleys are aligned and check the tension of the belts.
Use appropriately sized hoses, both on the inlet and outlet of the Pump, according to the technical specifications written on the Label.

8.3 START UP

Before starting, check the following:
- Check the oil level through the dedicated oil reservoir or inspection cap; top-up if necessary.
- Check the pressure value on the accumulator, if installed; inflate or deflate if necessary.
- The pressure regulator valve must be set at "0" pressure to favour intake.

Start and run the Pump for approximately 10 seconds until all the liquid has discharged from the delivery line. Once the intake cycle is complete, you can set the Pump at the required pressure, by adjusting the pressure regulator valve, without ever exceeding the maximum pressure written on the Pump's Label.

8.4 SWITCHING OFF AND STORAGE

After use or if the Pump is to be put away in storage, wash it internally. You can do this by running the Pump for several minutes with clean water, then disconnect the supply line and leave the Pump to run for approximately 15 seconds so that all the water inside the pump is drained.
A few minutes devoted to the internal washing of the pump brings considerable benefits in terms of the pump's lifetime.

⚠ Never leave liquid inside the pump. Damage to the diaphragms or to other components is often caused by liquid that is left inside the pump for a long time.

⚠ Do not wash the Pump externally: water could get into the Pump crankcase, for example through the seal rings of the crankshaft.

♻ Do not throw the liquid used to wash the Pump outdoors but observe current standards.

8.5 PRECAUTIONS AGAINST FREEZING

If shutdown during winter or in the case of places and seasons subject to frost, once the Pump has finished working, run it for the time required to Pump an emulsion of 50% of clean water and 50% of antifreeze fluid through it in order to prevent freezing and damage to the Pump.
The Pump must not be used to Pump antifreeze fluid that is not mixed with water.

⚠ **In the presence of ice or very cold temperatures at the workplace, the Pump must never be started**, otherwise the Pump could be seriously damaged. To start the system, the whole circuit must be completely defrosted.

9. MAINTENANCE

9.1 ROUTINE MAINTENANCE

If the Pump is used for light-duty purposes, the following routine maintenance jobs are advised:

- After the first 50 hours: Oil change (see section 9.2 - Lubrication)
- Every 500 hours: Oil change - Replace the diaphragms (see instructions below)
- Every 1000 hours: Replace the valves

For heavy-duty purposes, carry out the maintenance jobs more often.

- DIAPHRAGM REPLACEMENT INSTRUCTIONS -

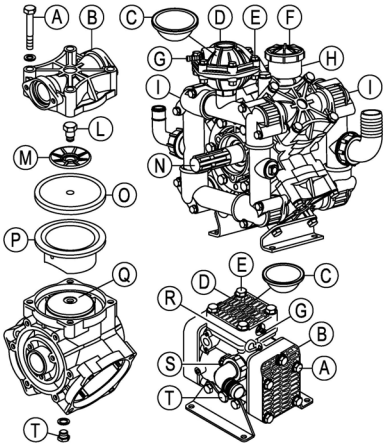

1. DRAIN CRANKCASE OIL: Drain Pump crankcase by removing the oil drain plug (T) located at the bottom of the Pump, also remove the oil fill cap (F) or plug (R).
2. EXTERNAL MANIFOLD REMOVAL: If your Pump has external manifolds (I), these must be removed prior to heads (B) removal.
3. HEAD REMOVAL: Do repairs one head (B) at a time. Remove the head bolts (A), then remove the Pump head (B) which may require some "light" prying.
4. DIAPHRAGM REMOVAL: Turn crankshaft (N) to bring piston (Q) up to the top of its stroke, remove the diaphragm bolt (L) and washer (M), then remove the diaphragm (O). If necessary, take off one sleeve (P) and wash well the internal components using diesel fuel. The sleeve (P) must be re-mounted in the same position as before.
5. INSTALLING NEW DIAPHRAGMS: Clean well the threaded hole of the piston (Q). Install the diaphragm bolt (L) and washer (M) into the new diaphragm (O).

Install this assembly to the piston (Q). Use Loctite 243 thread locker o equivalent on the diaphragm bolt (L). Then torque to the recommended specifications (see page 19). Now rotate crankshaft (N) to bring the piston (Q) and diaphragm (O) to the bottom of its stroke. Then seat the outside edge of

the diaphragm (O) into the Pump body.
5. INSTALLING NEW DIAPHRAGMS: Clean well the threaded hole of the piston (Q). Install the diaphragm bolt (L) and washer (M) into the new diaphragm (O). Install this assembly to the piston (Q). Use Loctite 243 thread locker o equivalent on the diaphragm bolt (L). Then torque to the recommended specifications (see page 19). Now rotate crankshaft (N) to bring the piston (Q) and diaphragm (O) to the bottom of its stroke. Then seat the outside edge of the diaphragm (O) into the Pump body.
6. HEAD INSTALL: When reinstalling the Pump head (B) it is very important to make sure that the check valves are installed correctly. For each cylinder there are two valves, one valve lets the fluid flow into to the head, the other valve lets the fluid flow out of the head. PAY VERY CLOSE ATTENTION TO THIS. After having correctly positioned the Pump head (B), tighten the screws (A) with the proper torque (see page 19).
7. INSTALLING PULSATION DAMPENER DIAPHRAGM: Bleed off the air in the chamber using the air-valve (G) on the dampener, then remove the cover bolts (E), cover (D) and diaphragm (C), install correctly the new diaphragm (C). Reinstall cover (D) and tighten the screws (A) with the proper torque (see page 19). Recharge dampener with air according to UDOR specifications at page 13.
8. REFILL PUMP CRANKCASE: Re-mount the oil drain plug (T). Fill Pump with SAE 15W-40 OIL to recommended mark on the oil reservoir (H) or on the sight glass (S). Rotate the crankshaft (N) while filling to eliminate air pockets. Re-mount the oil fill cap (F) or the oil fill plug (R).
9. INITIAL START UP: Start the Pump with the outlet line at “0” pressure; after about 5 minutes at “0” pressure you may increase the outlet pressure and make a few cycles of pressure on/off. This will evacuate any remaining air pockets in the crankcase. Turn Pump off and re-check oil level. Refill as necessary to proper oil level.
IMPORTANT: During initial start up, monitor the oil color. If it turns milky white, the diaphragms were not seated correctly.

9.2 LUBRICATION

The Pump is supplied with the correct amount of lubrication oil (see table on page 17).
Periodically check the oil level in the Pump through the oil level indicator.
Use OIL type SAE 15W-40 or equivalent. Here are some recommended types of oil:

BRAND	TYPE
AGIP	F.1 Supermotoroil 15W-40
BP	Vanellus C 15W-40
CASTROL	GTX 15W-40
ESSO	Uniflo 15W-40
MOBIL	Super M 15W-40
SHELL	Rimula R4 15W-40 / Helix Super 15W40
TOTAL	Rubia 15W-40 / Quartz 5000 15W-40

The oil is to be changed by draining it through the dedicated bottom discharge cap and strictly with the Pump stopped.

The oil level could vary during priming ; then it will stabilize when the system is pressurized. If the oil level gets lower during the first few hours of the pump’s operation , it could be normal. Simply refill . If instead , the oil level changes considerably after several hours of operation, the pump’s diaphragms might be damaged or there might be restrictions along the suction line.

⚠ DO NOT START THE PUMP IF THERE IS NO OIL IN THE PUMP!

During maintenance, you are recommended to:
- Use and wear suitable personal protection equipment (i.e. gloves).
- Wait for the machine to cool down and to have stopped completely.

During maintenance, do not throw residues outdoors but observe current standards.

If the Pump is to be scrapped:
1. Separate the various parts depending on their type (i.e. plastic, harmful fluids, metal etc.).
2. Use public or private waste disposal systems envisaged by local law to dispose of waste.
3. This device could contain harmful substances: improper use or incorrect disposal could have negative effects on human health and on the environment.

10. TROUBLE SHOOTING

PROBLEMS	PROBABLE CAUSES	SOLUTIONS
No pressure. Very little pressure. Pressure drops below working range when relief valve is open to boom or gun.	Insufficient strainer capacity, or dirty or plugged strainer.	Use larger capacity strainer or clean strainer.
	Suction hose restriction.	Eliminate restriction.
	Collapsed suction hose inside or outside tank restricting flow.	Replace collapsed hose.
	Air leak in inlet line.	Examine hoses and fittings, ensure air tight fit and no leaks.
	Pressure relief valve stuck or worn.	Repair or replace relief valve (§).
	Excessive tank foam due to low tank volume.	Refill tank.
	Nozzle volume is greater than Pump capacity.	a. Check relief valve adjustment. b. Reduce nozzle orifice size or number of nozzles used.
	One or more check valves seating improperly.	Clean or replace check valves(§).
Excessive gauge vibration. Excessive pulsation.	Pulsation dampener pressure too low or too high.	Adjust pulsation dampener pressure. (see page 21) – (§).
	Air leak in inlet line.	Examine hoses and fittings, ensure air tight fit and no leaks.
	Insufficient strainer capacity, or dirty or plugged strainer.	Use larger capacity strainer or clean strainer.
	Air not entirely evacuated from Pump cavity.	Run Pump with an open discharge to totally evacuate air.
Pump does not suck water.	Air leak in inlet line.	Examine hoses and fittings, ensure air tight fit and no leaks.
	Insufficient strainer capacity, or dirty or plugged strainer.	Use larger capacity strainer or clean strainer.
	One or more check valves seating improperly.	Clean or replace check valves(§).
Pump oil has milky color. The Pump oil comes out of discharge line; the oil level drops markedly. Oil plug pops out.	One or more diaphragms failures. ⚠ **STOP THE PUMP IMMEDIATELY!**	Replace the diaphragms (§). Diaphragms replacement instructions: see pages 22-23.
(§)These operations must be carried out by qualified personnel.		

11. OIL AND WEIGHT

SERIES	RECOMMENDED OIL QUANTITY				PUMP WEIGHT	
	Kg.	Lbs.	Lt.	Gal.	Kg.	Lbs.
ZETA 70	0,50	1.10	0,56	0.15	9	20
ZETA-P 40 ZETA-P 85 ZETA-P 100	1,02	2.25	1,14	0.30	12	26
ZETA 85	1,02	2.25	1,14	0.30	12	26
ZETA 100	1,02	2.25	1,14	0.30	13	29
ZETA 120 ZETA 140	1,04	2.29	1,16	0.31	18	40
ZETA 170	1,15	2.54	1,28	0.34	24	53
ZETA 200	1,15	2.54	1,28	0.34	26	57
ZETA 230 ZETA 260	2,40	5.29	2,68	0.71	36	79
ZETA 300	2,50	5.51	2,79	0.74	38	84
ZETA 350 ZETA 400	4,10	9.04	4,58	1.21	63	139
IOTA 20 IOTA 25	0,18	0.40	0,20	0.05	4	9
KAPPA 15	0,10	0.22	0,11	0.03	2,5	5.5
KAPPA 25 KAPPA 32	0,26	0.57	0,29	0.08	8	18
KAPPA 40 KAPPA 50	0,49	1.08	0,55	0.15	11	24
KAPPA 33 KAPPA 43 KAPPA 53	0,56	1.23	0,63	0.17	11	24
KAPPA 55 KAPPA 65	0,62	1.37	0,69	0.18	13	29
DELTA 75	1,04	2.29	1,16	0.31	19	42
DELTA 100	1,02	2.25	1,14	0.30	22	49
DELTA 125	1,82	4.01	2,03	0.54	30	66
DELTA 140	1.45	3.20	1.62	0.42	28	62
DELTA 170	1.80	3.96	2.00	0.52	43	94
OMEGA 135	1.45	3.20	1.62	0.42	28	62
OMEGA 139	1.45	3.20	1.62	0.42	28	62
OMEGA 170	2,42	5.33	2,70	0.71	45	99
BETA-S 135	1.45	3.20	1.62	0.42	28	62
BETA 110	2,14	4.72	2,39	0.63	45	99
BETA 170	2,42	5.33	2,70	0.71	52	115
BETA 200 BETA 240	4,50	9.92	5,03	1.33	75	165

12. TORQUE SPECIFICATIONS

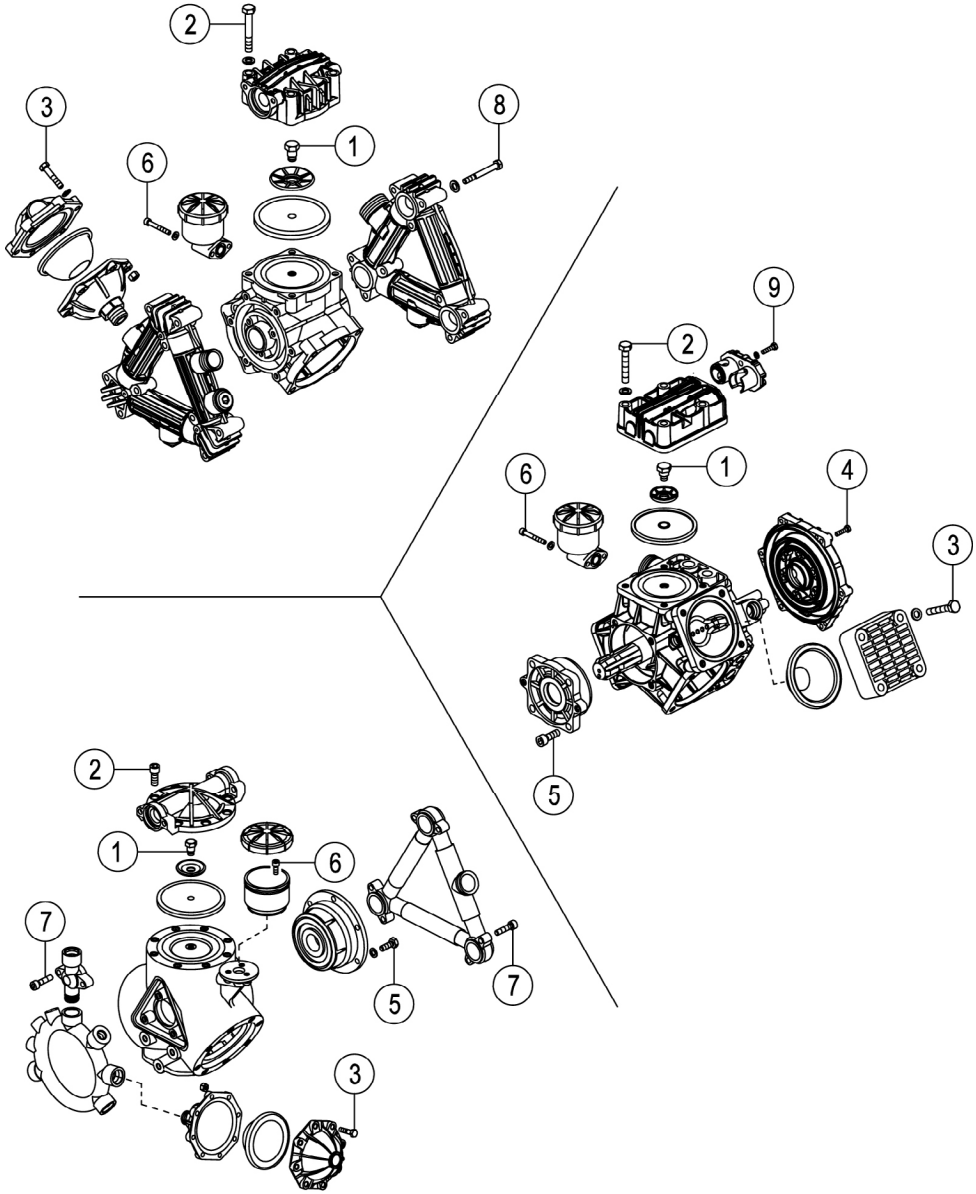

TORQUE SPECIFICATIONS

	1		2		3		4		5		6		7		8		9	
	Diaphragm Bolt (use Loctite® 243)		Head Bolts		Pulsation Dampener Bolts		Inlet Flange Bolts		Bearing Flange Bolts		Oil Cup Bolts		Manifold Bolts (Aluminium / Brass)		Manifold Bolts (Plastic)		Valves Cover Bolt	
MOD.	N•m	*lbf•ft*	N•m	*lbf•ft*	N•m	*lbf•ft*	N•m	*lbf•ft*	N•m	*lbf•ft*	N•m	*lbf•ft*	N•m	*lbf•ft*	N•m	*lbf•ft*	N•m	*lbf•ft*
ZETA 70	25	*18*	25	*18*	- - -	- - -	- - -	- - -	- - -	- - -	8	*6*	- - -	- - -	10	*7*	- - -	- - -
ZETA-P 40 ZETA-P 85 ZETA-P 100	\	*18*	40	*30*	- - -	- - -	- - -	- - -	- - -	- - -	8	*6*	- - -	- - -	20	*14*	- - -	- - -
ZETA 85	25	*18*	40	*30*	- - -	- - -	- - -	- - -	- - -	- - -	8	*6*	- - -	- - -	20	*14*	- - -	- - -
ZETA 100	25	*18*	40	*30*	25	*18*	- - -	- - -	- - -	- - -	8	*6*	- - -	- - -	20	*14*	- - -	- - -
ZETA 120 ZETA 140	30	*22*	40	*30*	25	*18*	- - -	- - -	- - -	- - -	8	*6*	- - -	- - -	20	*14*	- - -	- - -
ZETA 170 ZETA 200	30	*22*	40	*30*	25	*18*	- - -	- - -	34	*25*	8	*6*	- - -	- - -	20	*14*	- - -	- - -
ZETA 230 ZETA 260 ZETA 300	30	*22*	40	*30*	- - -	- - -	- - -	- - -	34	*25*	8	*6*	- - -	- - -	20	*14*	- - -	- - -
ZETA 350 ZETA 400	30	*22*	85	*63*	- - -	- - -	- - -	- - -	34	*25*	10	*7*	30	*22*	20	*14*	- - -	- - -
IOTA 20 IOTA 25	14	*10*	25	*18*	25	*18*	- - -	- - -	25	*18*	- - -	- - -	- - -	- - -	- - -	- - -	- - -	- - -
KAPPA 15	14	*10*	14	*10*	14	*10*	- - -	- - -	10	*7*	- - -	- - -	- - -	- - -	- - -	- - -	- - -	- - -
KAPPA 25 KAPPA 32	25	*18*	40	*30*	40	*30*	- - -	- - -	- - -	- - -	- - -	- - -	- - -	- - -	- - -	- - -	- - -	- - -
DELTA 40 DELTA 50	25	*18*	40	*30*	40	*30*	- - -	- - -	34	*25*	- - -	- - -	- - -	- - -	- - -	- - -	- - -	- - -
KAPPA 33 KAPPA 43 KAPPA 53	25	*18*	40	*30*	- - -	- - -	10	*7*	- - -	- - -	8	*6*	- - -	- - -	- - -	- - -	- - -	- - -
KAPPA 55 KAPPA 65	25	*18*	40	*30*	40	*30*	10	*7*	34	*25*	8	*6*	- - -	- - -	- - -	- - -	- - -	- - -
DELTA 75	25	*18*	40	*30*	40	*30*	10	*7*	34	*25*	8	*6*	- - -	- - -	- - -	- - -	25	*18*
DELTA 100	25	*18*	40	*30*	28	*20*	10	*7*	34	*25*	8	*6*	- - -	- - -	- - -	- - -	25	*18*
DELTA 125	25	*18*	40	*30*	28	*20*	10	*7*	34	*25*	8	*6*	- - -	- - -	- - -	- - -	25	*18*
DELTA 140	30	*22*	90	*67*	25	*18*	50	*36*	50	*36*	10	*7*	11	*8*	- - -	- - -	50	*36*
DELTA 170	30	*22*	90	*67*	25	*18*	50	*36*	50	*36*	10	*7*	11	*8*	- - -	- - -	50	*36*
OMEGA 135	30	*22*	85	*63*	- - -	- - -	- - -	- - -	34	*25*	10	*7*	30	*22*	- - -	- - -	- - -	- - -
OMEGA 139	30	*22*	85	*63*	- - -	- - -	- - -	- - -	34	*25*	10	*7*	30	*22*	- - -	- - -	- - -	- - -
OMEGA 170	30	*22*	50	*37*	28	*20*	- - -	- - -	34	*25*	10	*7*	30	*22*	- - -	- - -	- - -	- - -
BETA-S 135	30	*22*	85	*63*	- - -	- - -	- - -	- - -	34	*25*	10	*7*	30	*22*	- - -	- - -	- - -	- - -
BETA 110	30	*22*	50	*37*	28	*20*	- - -	- - -	34	*25*	10	*7*	30	*22*	- - -	- - -	- - -	- - -
BETA 170	30	*22*	50	*37*	28	*20*	- - -	- - -	34	*25*	10	*7*	30	*22*	- - -	- - -	- - -	- - -
BETA 200 BETA 240	30	*22*	50	*37*	- - -	- - -	- - -	- - -	34	*25*	10	*7*	30	*22*	- - -	- - -	- - -	- - -

DECLARATION OF INCORPORATION OF PARTLY COMPLETED MACHINERY

according to Machinery Directive (2006/42/CE and subsequent amendments) and the implementing provisions.

The manufacturer:

UDOR S.p.A.

Via A. Corradini, 2 - 42048 Rubiera (Reggio Emilia) - Italia

in the person of its legal representative

declares under its sole responsibility that the "partly completed machinery" of its own production, namely:

Diaphragm Pumps, series

ZETA - ZETA-P - RO - IOTA - KAPPA - DELTA - OMEGA - BETA

which this declaration is referred to, is in conformity with the essential safety requirements of Directive 2006/42/EC, for which it is applied and respected in all the essential issues:

• from 1.1.1 to 1.1.3	• from 1.2.6 to 1.3.2	• 1.3.8.2	• 1.5.13	• 1.7.2
• from 1.1.5 to 1.1.5	• 1.3.4	• from 1.4.1 to 1.4.2.1	• from 1.6.1 to 1.6.2	• from 1.7.4 to 1.7.4.3
• 1.2.4.3	• from 1.3.7 to 1.3.8	• from 1.5.2 to 1.5.8	• from 1.6.4 to 1.7.1	

with the Relevant Technical Documentation conforming to the annex VII B.
They also comply with the following Standard: UNI EN 809.

It is additionally specified that:

- The Relevant Technical Documentation is kept at UDOR S.p.A. premises in: Via A. Corradini, 2 – 42048 Rubiera (Reggio Emilia) – Italy, in the person of its legal representative.
- Any reasoned request by national authorities will be fulfilled with the relevant information on the "Partly Completed Machinery".
- The "Partly Completed Machinery" Diaphragm Pumps cannot be operated until the machine where they are incorporated into, has complied with the same Directive 2006/42/EC and with the other potentially applicable Directives.

Rubiera, 29/12/2009

Marco Zanasi
(CEO UDOR S.p.A.)

is forbidden to reproduce or translate any part of this manual without written authorisation from the owner.
UDOR S.p.A. reserves the right to add modifications to the products, information and illustrations herein without notice..

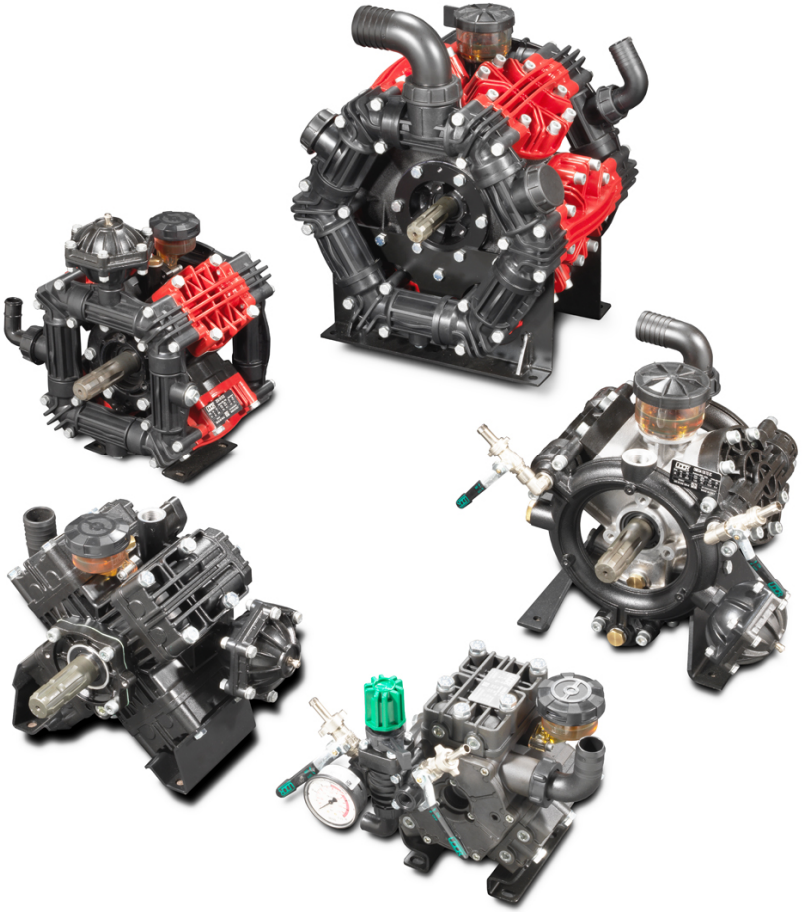

UDOR S.p.A.

Via A. Corradini, 2 - 42048 Rubiera (Reggio Emilia) - ITALY

Tel. (+39) 0522 628249 - Fax (+39) 0522 628953

info@udor.it - www.udor.it

080594
06/20
Rev. 3.1