ZETA 120

3-Cylinder, Low-Pressure Diaphragm Pumps

ZETA 120 low pressure 3-cylinder diaphragm pumps have anodized aluminum bodies with plasticized aluminum heads, stainless steel valves and glass-filled nylon manifolds.

ZETA 120 pumps are excellent for various horticultural and agricultural spraying applications.

Pumps are available with a Universal VA drive face, 1-3/8" Male PTO shaft, 1-3/8" Male PTO x 25mm solid, keyed thru-shaft or gear reductions for 3/4" or 1" shaft gas engines.

Model	GPM	l/min	PSI	bar	RPM	Drive Configuration	Weight
ZETA 120 VA	31.0	116	300	20	550	Universal VA Drive Face.	45 LBS
ZETA 120 1C	31.0	116	300	20	550	1-3/8" 6-Spline Male PTO Shaft	45 LBS
ZETA 120 TS1C	31.0	116	300	20	550	1-3/8" 6-Spline Male PTO x 25mm Solid Keyed Thru-Shaft	45 LBS
ZETA 120 VAGR3/4	31.0	116	200	13.8	550	Gear Reduction for 3/4" Shaft Gas Engine, 4-6.5 HP	55 LBS
ZETA 120 VAGR1	31.0	116	300	20	550	Gear Reduction for 1" Shaft Gas Engine, 8-20 HP	55 LBS

Specifications	ZETA 120
Inlet Port	1-1/2" Hose Barb
Outlet Ports - Valve	3/4" Hose Barb
Piston Diameter	55.0mm
Crankshaft Stroke/Code	11.0mm / J
Dims. - Pump Only	12.5"L x 13.5"W x 12.5"H

Lubrication: Requires 40 oz. of Udor Lube 40W Premium Pump Oil.
Alternate Oil: 30W non-detergent or 15W-40 non-detergent oil.

Description	Part #
Diaphragm Kit (GREENTECH)	6062.H2
Diaphragm Bolt & Washer Kit	6062.16
Valve Kit	6062.D7
Complete Repair Kit	8700.04CK

UDOR USA
World Leader in Diaphragm and Plunger Pumps

An UDOR Brand
BOOMINATOR
BOOMLESS SPRAY NOZZLES

6180 140th Avenue NW
Ramsey, MN 55303

Ph: 651-785-0666
Fax: 800-732-2670

www.udorusa.com
www.boominator.com
info@udorusa.com

Scan this QR Code for More Information

ZETA 120 VA

606216	
KIT 515	
●	
CODE	QTY
010201	3
030107	3

6062D7	
KIT 640	
■	
CODE	QTY
110101	6
600677	6

6062H2	
KIT 670	
◆	
CODE	QTY
090314	1
090361	3
110101	6

8700.04CK	
▲	
CODE	QTY
010201	3
030107	3
090314	1
090631	3
110101	6
110104	1
110142	1
600677	6

Maximum Flow	31.0 GPM / 116 lpm
Maximum Pressure	300 PSI / 20 bar
Maximum RPM	550 RPM
Inlet Port - Hose Barb	1-1/2" HB
Outlet Port - Hose Barb	3/4" HB
Bypass - Hose Barb	-
Dimensions	13"L x 11"W x 12"H
Weight	45 lbs

Lubrication: Requires 40 oz. of Udor Lube 40W Premium Pump Oil.
Alternate Oil: 30W non-detergent or 15W-40 non-detergent oil.

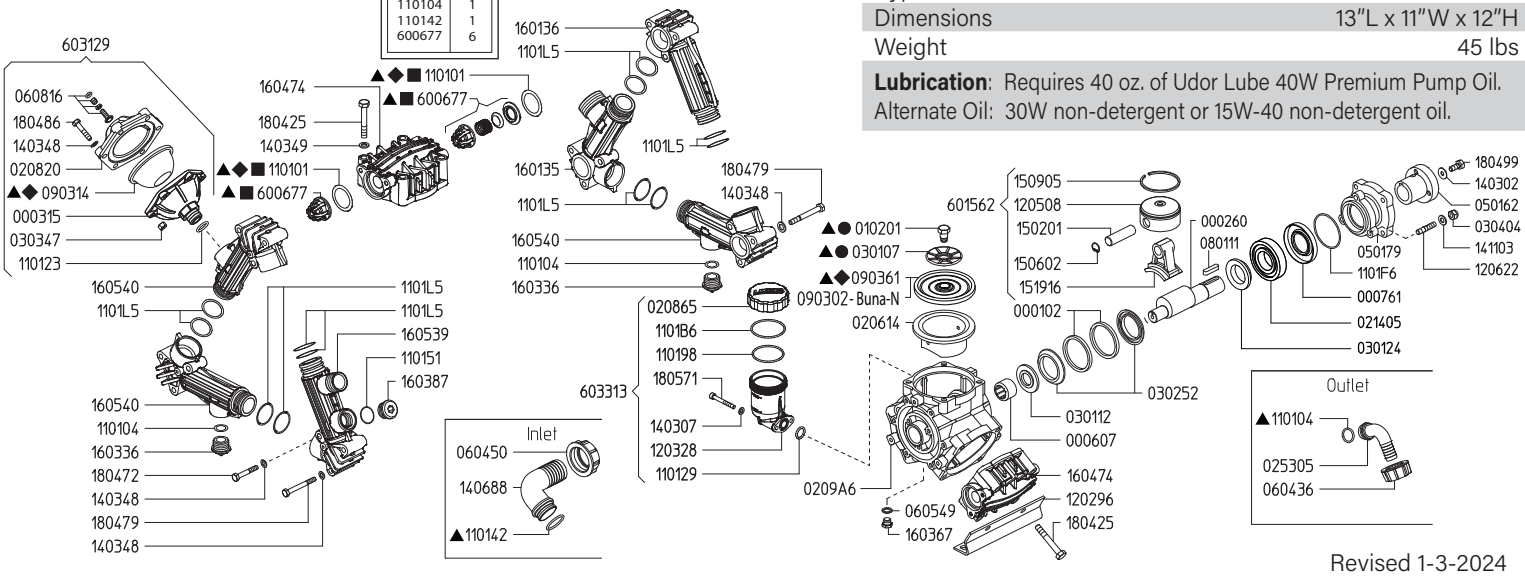

Revised 1-3-2024

Part #	Description	Qty
0001.02	RETAINER RING	2
0002.60	CRANKSHAFT	1
0003.15	ACCUMULATOR BASE	1
0006.07	BEARING D25	1
0007.61	OIL SEAL D35	1
0102.01	DIAPHRAGM BOLT ●▲	3
0206.14	SLEEVE D75	3
0208.20	ACCUMULATOR COVER	1
0208.65	OIL RESERVIOR CAP	1
0209.A6	CRANKCASE	1
0214.05	BALL BEARING - D35	1
0253.05	HOSE BARB D20	1
0301.07	DIAPHRAGM WASHER ●▲	3
0301.12	BEARING DISC - D25	1
0301.24	BEARING DISC - D35	1
0302.52	ROD SPACER	2
0303.47	HEX NUT M8X8	6
0304.04	NYLOCK NUT M10	4
0501.62	ADAPTER - VA	1
0501.79	FLANGE - VA	1
0604.36	BARB NUT G1"	1
0604.50	BARB NUT G1-1/2"	1
0605.49	OIL PLUG GASKET	1
0608.16	AIR VALVE ASSEMBLY	1
0801.11	KEY A10X8X40	1
0903.02	PISTON DIAPHRAGM - BUNA-N 116MM	3
0903.14	ACCUMULATOR DIAPHRAGM ◆▲	1
0903.61	PISTON DIAPHRAGM - GREENTECH 116MM ◆▲	3
1101.01	O-RING - VALVE ■◆▲	6
1101.04	O-RING - DISCHARGE BARB▲	3
1101.23	O-RING - ACCUMULATOR	1
1101.29	O-RING - OIL RESERVIOR	1
1101.42	O-RING - INLET BARB▲	1
1101.51	O-RING - PLUG	1
1101.98	O-RING - OIL RESERVIOR	1
1101.B6	O-RING - OIL RESERVIOR	1
1101.F6	O-RING - FLANGE	1
1101.L5	O-RING - MANIFOLD TUBES	12
1202.96	RAIL	2

Part #	Description	Qty
1203.28	OIL RESERVIOR	1
1205.08	ALUMINIUN PISTON D75	3
1206.22	STUD M10X46	4
1403.02	WASHER M10	1
1403.07	WASHER M6	2
1403.48	WASHER M8	24
1403.49	WASHER M10	8
1406.88	HOSE BARB - SUCTION 1-1/2"	1
1411.03	SERATED WASHER M10	4
1502.01	PIN D18X64	3
1506.02	SNAP RING D18	3
1509.05	PISTON RING D75	3
1519.16	CONNECTING ROD	3
1601.35	SUCTION MANIFOLD G1"1/2 M	1
1601.36	INLET-OUTLET MANIFOLD	1
1603.36	PLUG G3/4	2
1603.67	PLUG G1/4	1
1603.87	PLUG G3/4	1
1604.74	HEAD	3
1605.39	MANIFOLD G1" M - G3/4 F	1
1605.40	INLET-OUTLET MANIFOLD G3/4 F	3
1804.25	HEX BOLT M10X75	12
1804.72	HEX BOLT M8X50	6
1804.79	HEX BOLT M8X70	12
1804.86	HEX BOLT M8X40	6
1804.99	HEX BOLT M10X25	1
1805.71	ALLEN BOLT M6X50	2
6006.77	VALVE ASSEMBLY W/O O-RING ■▲	6
6015.62	ROD ASSEMBLY - D75 PISTON	3
6031.29	ACCUMULATOR ASSEMBLY	1
6033.13	OIL RESERVOIR ASSEMBLY	1
6062.16	DIAPHRAGM BOLT & WASHER (KIT 515)	1
6062.D7	IN/OUTLET VALVE KIT (KIT 640)	1
6062.H2	DIAPHRAGM KIT - GREENTECH (KIT 670)	1
8700.04CK	COMPLETE REPAIR KIT	1

● Parts in 6062.16 (Kit 515)
■ Parts in 6062.D7 (Kit 640)
◆ Parts in 6062.H2 (Kit 670)
▲ Parts in 8700.04CK

ZETA 120/140 DIMENSIONS

All Dimensions are WITHOUT Control Unit or Regulator

Dimensional Drawings are Shown in Millimeters. To Convert to Inches, Multiply Dimension x 0.03937

Specifications	ZETA 120	ZETA 140
Inlet Port - Hose Barb	1-1/2" HB	1-1/2" HB
Outlet Ports - Hose Barb	3/4" HB	3/4" HB
Dimensions - Pump Only	12.5"L x 13.5"W x 12.5"H	
Diaphragm Material	GREENTECH (Std) Buna-N (Opt)	

Lubrication: Requires 39 oz. of Udor Lube 40W Premium Pump Oil. Alternate Oil: 30W non-detergent or 15W-40 non-detergent oil.

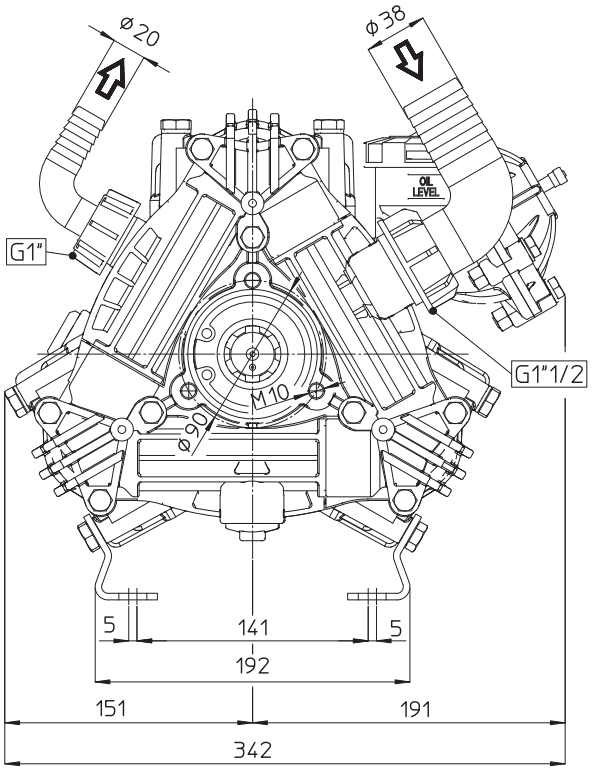

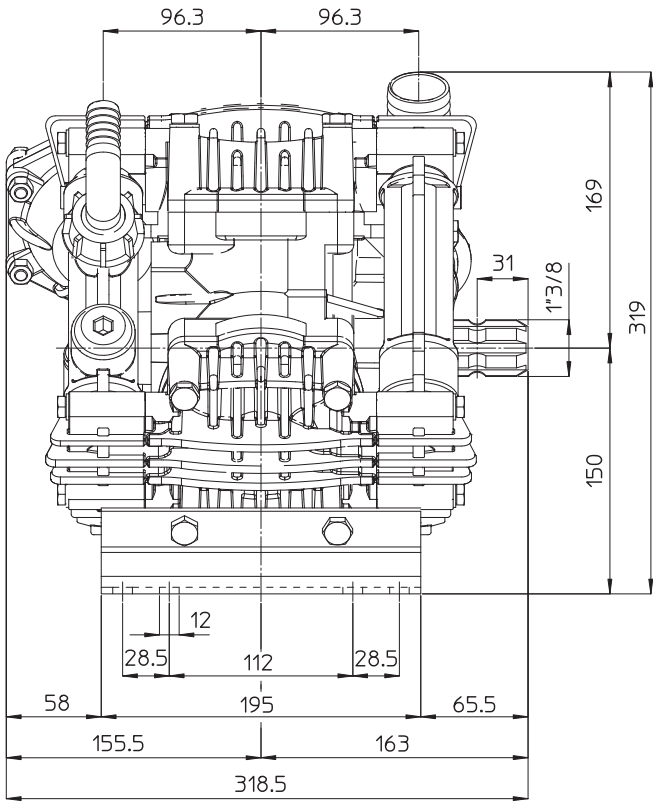

TORQUE SPECS
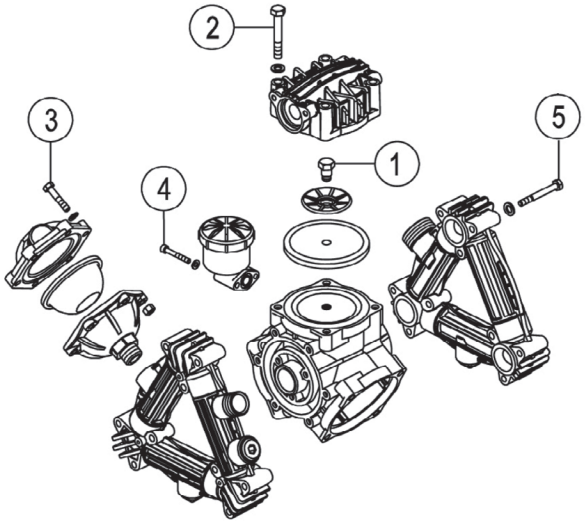
Ref.	Description	Ft./lb.	Nm
1	**Diaphragm Bolts** (Use Loctite 243)	22	30
2	**Head Bolts**	30	40
3	**Pulsation Dampener Bolts**	18	25
4	**Oil Cup Bolts**	6	8
5	**Manifold Bolts (Plastic)**	14	20